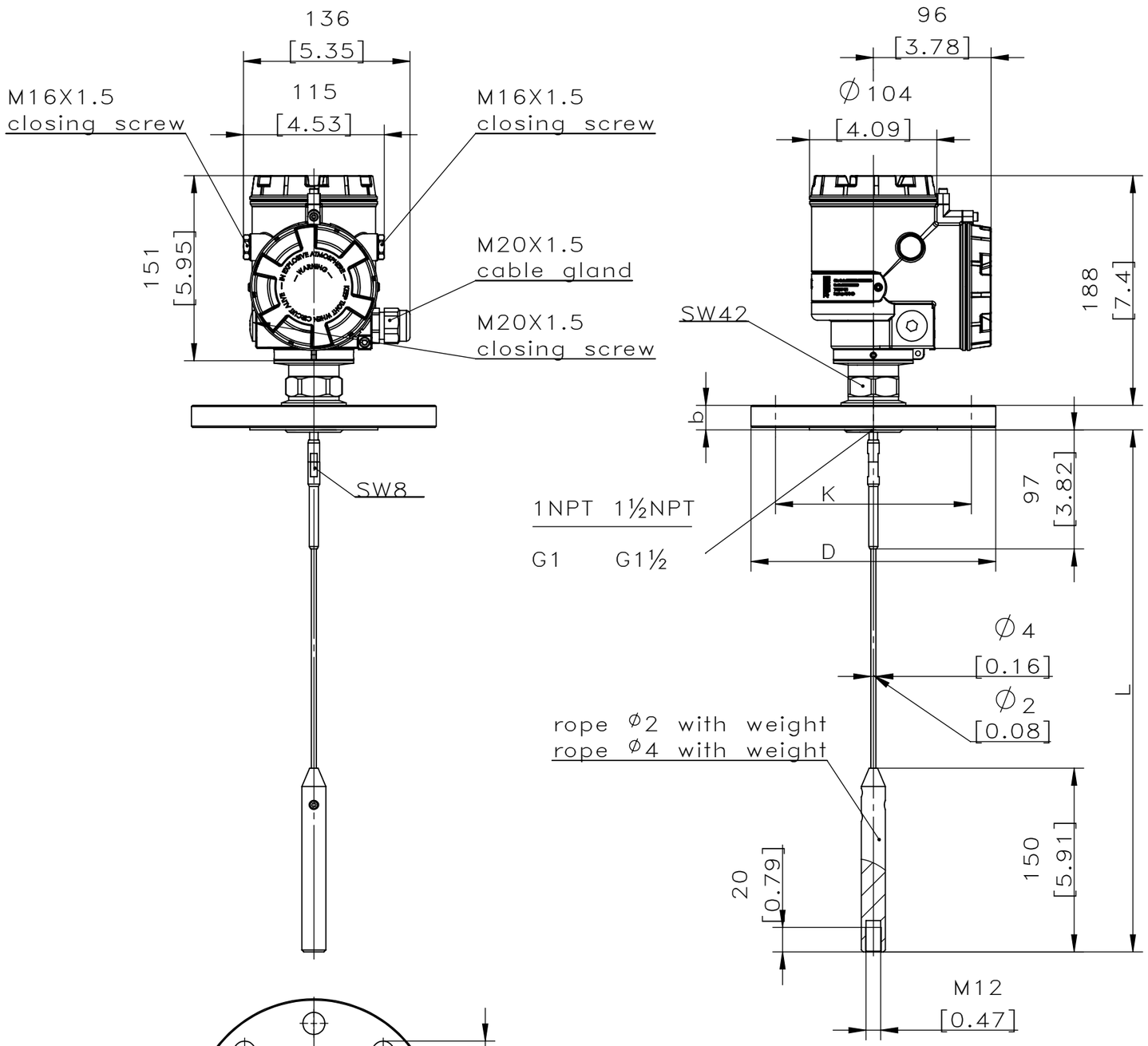

FLANGE				
ASME B 16.5	D	b	K	d
ASME 2" 150 RF	ø152.4	19.1	ø120.7	4Xø19.1
ASME 3" 150 RF	ø190.5	23.9	ø152.4	4Xø19.1
ASME 4" 150 RF	ø228.6	23.9	ø190.5	8Xø19.1
ASME 6" 150 RF	ø279.4	25.4	ø241.3	8Xø22.4
ASME 8" 150 RF	ø342.9	28.4	ø298.5	8Xø22.4
ASME 10"150 RF	ø406.4	30.2	ø362	12Xø25.4
ASME 12"150 RF	ø482.6	31.8	ø431.8	12Xø25.4
DIN 2501/EN1092-1				
DN50 PN16/40	ø165	20	ø165	4Xø18
DN80 PN16/40	ø200	24	ø165	8Xø18
DN100 PN16	ø220	20	ø165	8Xø18
DN150 PN16	ø285	22	ø165	8Xø22
DN200 PN16	ø340	24	ø165	12Xø22
DN250 PN16	ø405	26	ø165	12Xø26
DN300 PN16	ø460	28	ø165	12Xø26
JIS B 2220				
DN50 10K RF	ø155	16	ø120	4Xø19
DN80 10K RF	ø185	18	ø150	8Xø19
DN100 10K RF	ø210	18	ø175	8Xø19
DN150 10K RF	ø280	22	ø240	8Xø23
DN200 10K RF	ø330	22	ø290	12Xø23
DN250 10K RF	ø400	24	ø355	12Xø25

NUM	DETAILS	DATE	CHECKED

UNLESS SPECIFIED OTHERWISE
PRIMARY UNITS MILLI METERS
SECONDARY INCHES
REFERENCE IN PARENTHESES

GENERAL TOLERANCES
1 DECIMAL PLACE ±0.15
2 DECIMAL PLACES ±0.15
3 DECIMAL PLACES ±0.15
ANGULAR DEGREES

DRAWN	S.LYCETT	04.11.2009
CHECKED	R. SMITH	05.11.2009
M.E. APP'D	S.SEME	15.11.2009
Q.A. APP'D	G.BUSH	16.11.2009
DWG APPR.	A.GREEN	04.11.2009
ENG. REL. NO.		
REF.		

THIRD ANGLE PROJECTION — DO NOT SCALE DRAWING

ROCKHILL AUTOMATION, INC.
www.rockhill.ca

ROHEVEL-GRT2201 Drawing

DWG. NO. 0802-0005-01MMD170421110 REV L
CODE ID NO. 03554 DWG SIZE: C SCALE: 1:4 SHEET 1 OF 1

THIS DOCUMENT CONTAINS PROPRIETARY INFORMATION AND SUCH INFORMATION MAY NOT BE DISCLOSED TO OTHERS FOR ANY PURPOSE OR USED FOR MANUFACTURING PURPOSES WITHOUT WRITTEN PERMISSION FROM ROCKHILL AUTOMATION, INC.